JST134U-800D 1A TRIAC

Rev.A.2.1

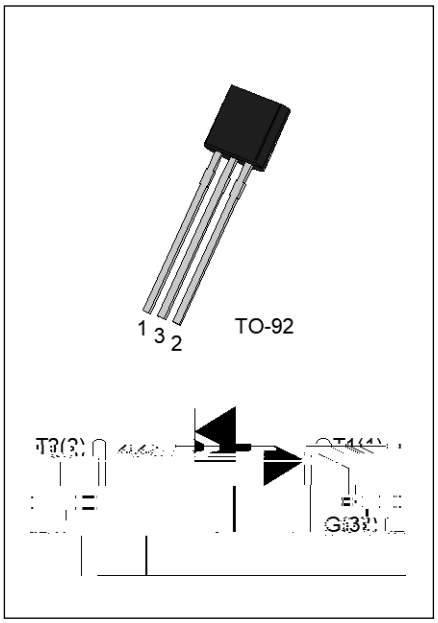

Parameter		Symbol	Value	Unit
≤				
×				

FIG.1:
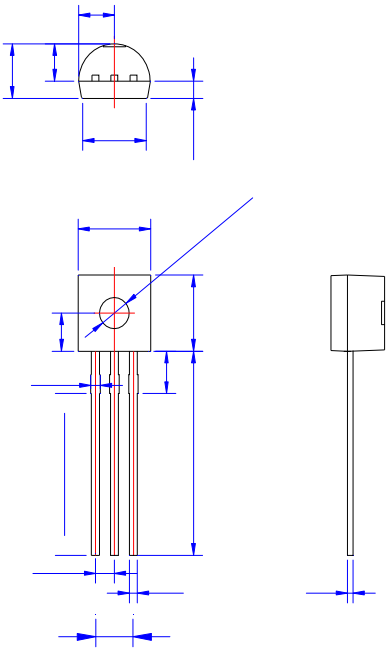
FIG.2: